Patio Productions San Diego
2161 Hancock St
San Diego, CA 92110
Phone: 1-888-947-4449

Product Images

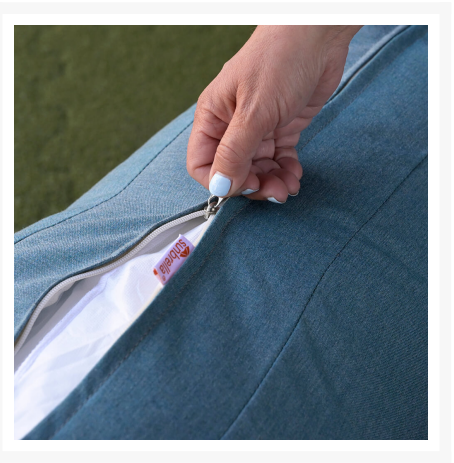

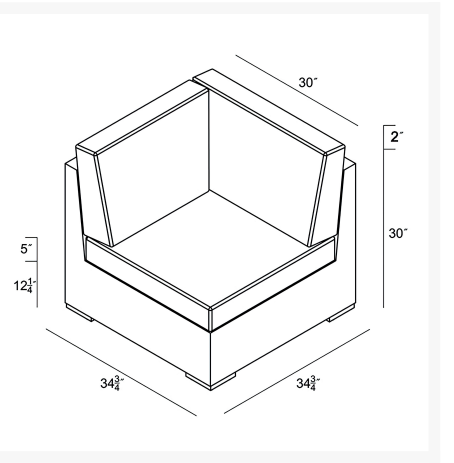
30˝
2˝
30˝
5˝
12¼˝
34¾˝
34¾˝

Short Description

Arden Corner Section HL-ARD-CH-CS by Harmonia Living

Description

The Arden Corner Section (HL-ARD-CH-CS) by Harmonia Living will bring a cozy, rustic appeal to modern outdoor setting. Its fully-welded aluminum frames are treated with a powder-coated finish to ensure lasting performance across the seasons while the wicker is hand-woven from High-Density Polyethylene (HDPE) that is resistant to cracking. Made for lasting durability, color is infused into the HDPE wicker to prevent fading and finished in a beautifully textured Chestnut color to give it a natural look and feel. The cushions are made in the USA with quick-drying, Dacron and UV-treated, marine-grade PremoBond thread to create a supportive, yet comfortable seat that is meant to last throughout the seasons. All cushions are constructed from Sunbrella, Outdura, and Revolution performance fabrics, which carry a 5-year fade warranty. Known for its Quick-Ship Program, Harmonia Living offers 9 popular Sunbrella fabric options which are fade resistant, easy to clean, and ready to ship within days of placing an order! The modular design allows you to create the perfect seating arrangement for your patio space - big or small. Harmonia Living can be tailored to both Residential and Commercial settings and is committed to delivering exceptional furnishings to your outdoor space.

Includes

- One (1) Arden Corner Section HL-ARD-CH-CS

Dimensions

- 34.75"W x 34.75"D x 32"H (35 lbs.)
- Frame Height: 30.25"
- Seat Height (No Cushion): 12.25
- Seat Height: (With Cushion): 17.25
- Back Height: 14.75

Features

- High-Density Polyethylene (HDPE) is a synthetic all-weather wicker made with virgin materials that provides resistance to fading and cracking. Wicker color is infused into the HDPE wicker for lasting durability.
- Wicker is hand-woven onto a thick gauge, powder coated aluminum frame that is lightweight, durable and corrosion resistant.
- Each seat is triple reinforced for lasting durability.
- Decorative teak wood feet. Each seat is triple reinforced for lasting durability.
- Plastic foot glides help to protect your patio from scratching and also to help keep the furniture protected from dirt or water that can accumulate on the patio.
- Cushions are made in America using American materials including Sunbrella, Outdura and Revolution performance fabrics which are easy to clean, are fade, stain, mildew resistant and carry a 5 year warranty.
- Machine washable cushion covers feature durable and frustration free YKK brand zippers for easy removal. Top and bottoms of our seat cushions are identical so they can be flipped if a stain gets on the cushion between machine washes.
- All cushions are sewn with PremoBond brand marine-grade UV treated thread made from high-quality

mold, mildew, and rot resistant bonded polyester to ensure your cushions won't fall apart at the seams.
- Each seam is finished with overlock stitching for additional durability, reinforcement, weather proofing and to prevent the fraying of internal fabric edges during machine washing.
- American made CertiPUR-US® certified foam cushion inserts which are produced without harmful chemicals such as formaldehyde, ozone depleters, PBDEs, TDCPP or TCEP flame retardants and are free of mercury, lead, and other heavy metals to protect the planet as well as the health of you and your loved ones.
- Thick 4.5" foam seat cushion inserts plus additional layers of 1" of quick-drying Dacron on the top and bottom to help wick away moisture. This combination of layers creates the "Goldilocks" of cushions, firm enough to avoid bottoming out but soft enough for comfort.
- Back cushions are filled with 100% polyester fill fibers for a cloud-like backrest. The insert is sewn shut in a mesh encasing to keep the filling clean and easy to unstuff.
- Cushion ties are sewn to the back of each seat cushion to secure them in place to the frame.
- No assembly required.

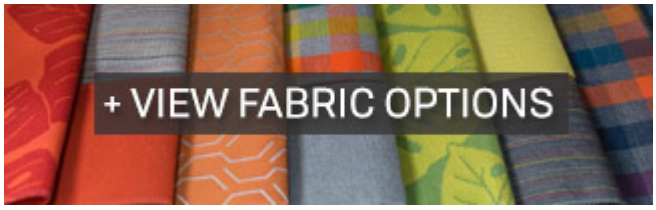

Warranty

Harmonia Living's warranty covers manufacturing defects; normal wear and tear is not included. With a little bit of care, your furniture will outlive the warranty for many years.

- HDPE Wicker: Harmonia Living extends a 2-year residential / 1-year commercial warranty against structural failure, finish fading, or cracking.
- Cushion: Harmonia Living extends a 2-year residential / 1-year commercial warranty against defects in workmanship and other materials used in cushion production
- Fabric: Sunbrella ®, Revolution and Outdura each carry a 5 year warranty. Please refer to the warranty of Sunbrella ®, Revolution and Outdura fabrics as the manufacturer's warranty will apply.

Care and Maintenance

HDPE Wicker: To clean HDPE wicker, rinse with cool water, and use a cloth with mild dish soap to wipe down and remove dust and residue. Use cool water to wipe away any soapy residue. Dry with a soft cloth.

Cushions & Outdoor Fabric: Regular cleaning with mild soap and water will help prevent the buildup of dirt, which can generate mildew. Simply spot-treat stains with mild soap and water, rinse, and allow the fabric to air dry. Cushions will dry much faster when removed from the frames and placed on their sides or edges. For more information, please visit the fabric manufacturer's website.

Covers & Storage: When not in use, we recommend using a protective cover with your furniture. During harsh weather and extreme temperatures, we recommend storing the cushions in a shed or garage and covering the frames with protective covers. If you store the frames indoors during the winter, avoid storing them upside down, which can trap moisture.

About the Manufacturer

Harmonia Living - an integration of beauty, function and durability. For over 15 years, Harmonia Living has strived to represent versatility and unparalleled value in every collection it designs and manufactures. Originally conceived from a vision to integrate elegant, high-end styles with approachable prices, Harmonia

Living has grown from a small company based in San Diego, California to one that services the contiguous United States. Harmonia Living is committed to delivering outstanding service and exceptional indoor and outdoor furnishings to bring people together.

Additional Information

SKU	HL-ARD-CH-CS
Brand	Harmonia Living
Ships Out Estimate	Quick Ship: 3 - 5 Business Days Stocked Cushion Fabric: 2 - 3 Weeks
Residential Warranty	HDPE Wicker: 2 Years Cushions: 2 Years Fabric: 5 Years
Fabric	**Performance Fabric Choices**

Arden Corner Section HL-ARD-CH-CS by Harmonia Living

was
$1,315.00 Special Price
$939.00