Patio Productions San Diego
2161 Hancock St
San Diego, CA 92110
Phone: 1-888-947-4449

Product Images

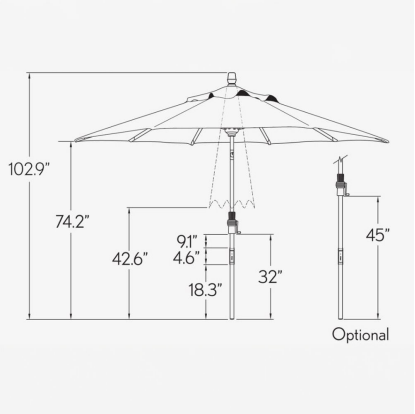

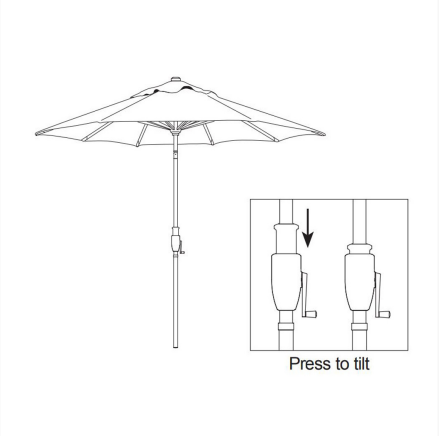

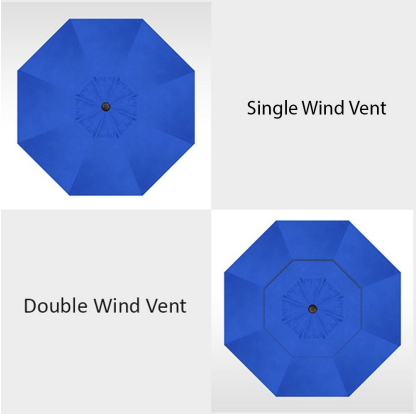

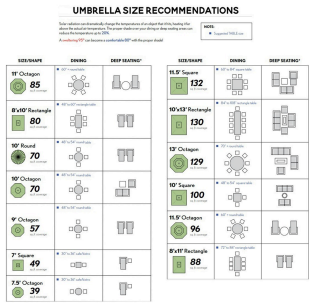

Short Description

7.5' Glide Tilt Custom Octagon Market Umbrella UM977 by Treasure Garden

Description

The 7.5' Glide Tilt Custom Octagon Market Umbrella UM977 (UM977) by Treasure Garden is elegant, durable and easy to use, bringing the perfect amount of shade and style to your patio. A revolutionary new slide to tilt canopy function makes shading easier than ever! Simply press down on the housing to tilt, or pull up to

return the umbrella to an upright position. This sunshade is available in two sleek, rust-proof finishes and a variety of top quality, fade resistant fabrics. Whether you're looking to go bold, relax or bring a fresh new look to your patio, this umbrella is adaptable to any and all of your outdoor needs. If you can't find the fabric you're looking for, give us a call at 1-888-947-4449 for more options!

Includes

- One (1) 7.5' Glide Tilt Custom Octagon Market Umbrella UM977
- Base and protective cover sold separately

Recommended Bases:

- Minimum base weight with dining table: 35 - 50 lbs
- Minimum free standing base weight: 100 lbs

Dimension

- Open Umbrella Width: 7.5'
- Coverage: 39 sq. ft.
- Number of Ribs: 8
- Bottom Pole Diameter: 1.5"
- Top Pole Diameter: 1.38"
- Weight: 17 lbs.

Features

- Convenient crank lift system for quick and easy opening
- Revolutionary glide tilt system for effortless tilting
- Powder coated aluminum frame is sleek, durable and corrosion resistant
- Wind Vent serves dual purpose of venting heat and providing stability against wind
- Includes 32" bottom pole, but you can add 36" (best for counters) or 45" (ideal for bars) for more height
- Available in Sunbrella, O'bravia, Outdura and Docril fabrics, which are distinctive, fade resistant and easy to clean
- Simply hose off to clean and store in protective cover away from elements to extend lifespan
- Great for smaller patios and back yards

Warranty

- Frame has 1 year warranty against manufacturing defects
- Sunbrella, Outdura and Docril fabrics have a 5 year fade warranty / O'bravia fabrics have a 4 year fade warranty

Care and Maintenance

The 7.5' Glide Tilt Custom Octagon Market Umbrella UM977 is easy to care for. Simply hose off to clean or spot treat for stains. To further extend the lifespan of your umbrella, store in a protective cover away from the elements. If you plan on using your umbrella near saltwater or an indoor pool, wipe down regularly to prevent paint blistering. Don't forget to store it ahead of a storm!

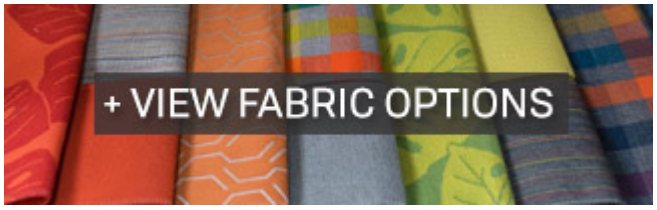

About the Manufacturer

Treasure Garden has built a reputation of leadership by producing top quality, custom-made, handcrafted

umbrellas, rugs, and furniture covers. Our designers combine advanced technology with the latest color and fabric trends to enhance our products and their performance every year. Thanks to the 6,000 employees who share in the same vision and their attention to detail, Treasure Garden continues to be "The World's Favorite Shade."

Additional Information

SKU	UM977
Brand	Treasure Garden
Ships Out Estimate	3 - 4 Weeks
Residential Warranty	Frame: 1 Year,Sunbrella/Docril/Outdura Fabrics: 5 Years,O'bravia Fabrics: 4 Years
Fabric	**Performance Fabric Choices**

7.5' Glide Tilt Custom Octagon Market Umbrella UM977 by Treasure Garden

was
$340.00 Special Price
$229.00